

DAS/IBS Componentes

Catálogo

Attenuator 200W (698-3800)

Model: PVL106.400638

Product Features:

- Low VSWR
- Low PIM
- High reliability

Technical Specifications:

Electrical										
Attenuation	3	5	7	10	15	20	25	30	35	40
Attenuation accuracy	±0.6			±0.8				±1.0		
Frequency (MHz)	698-3800									
VSWR	⩽1.25									
PIM, 3rd Order (dBc)	⩽ -160 (2 x 43 dBm carrier)									
Average power, maximum (W)	200									
Impedance (Ω)	50									
Grounding	DC Ground									

Mechanical	
Operating temperature	-20°C to +60°C
Storage temperature	-35°C to +75°C
Relative humidity	5% - 95%
Classification of waterproof	IP67
Dimensions (H x W x D) (mm)	200x198x82mm
Net weight (with installation kit) (kg)	⩽4.5
Connector	N-Female/Din-Female/4.3-10 Female

Schematic Diagram

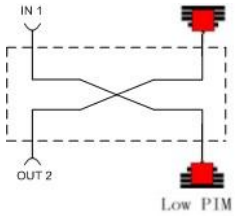

Outline Drawing:

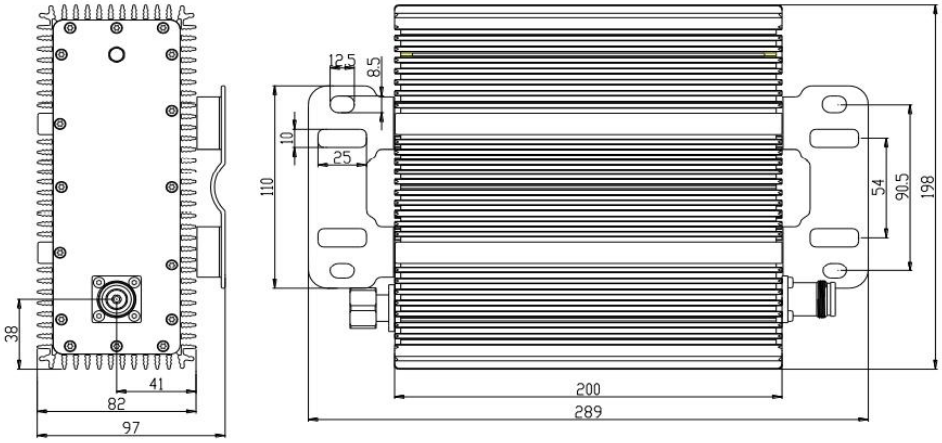

Attenuator 100W (698-2700)

Model: PVL106.400627

Product Features:

- Low VSWR
- Low PIM
- High reliability

Technical Specifications:

Electrical										
Attenuation	3	5	7	10	15	20	25	30	35	40
Attenuation accuracy	±0.6			±0.8			±1.0			
Frequency (MHz)	698-2700									
VSWR	≤1.25									
PIM, 3rd Order (dBc)	≤ -160 (2 x 43 dBm carrier)									
Average power, maximum (W)	80									
Impedance (Ω)	50									
Grounding	DC Ground									

Mechanical	
Operating temperature	-20°C to +60°C
Storage temperature	-35°C to +75°C
Relative humidity	5% - 95%
Classification of waterproof	IP67
Dimensions (H x W x D) (mm)	140x160x82mm
Net weight (with installation kit) (kg)	≤2.5
Connector	N-Female/Din-Female/4.3-10 Female

Schematic Diagram

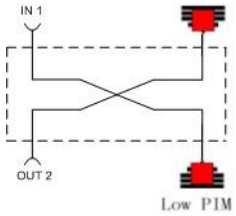

Outline Drawing:

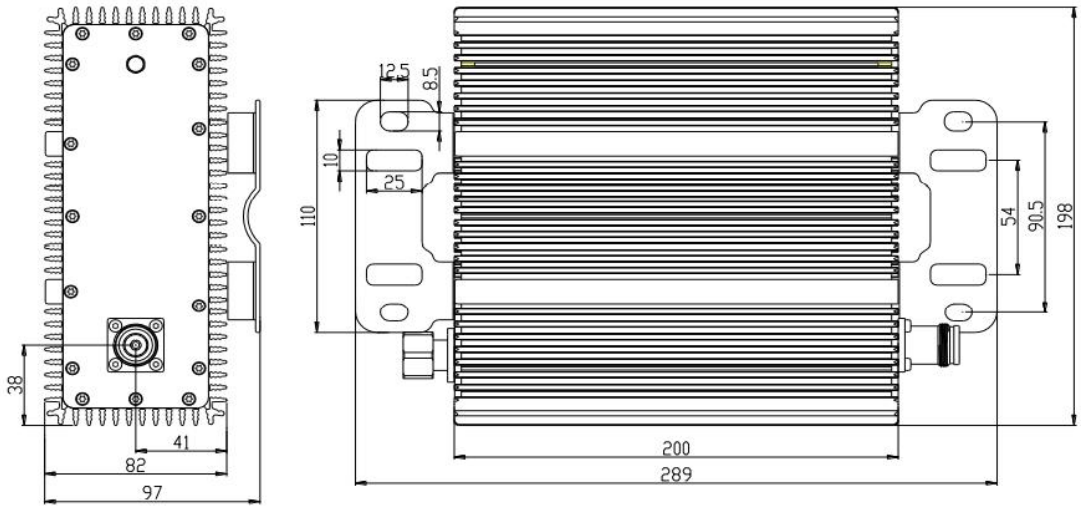

Termination Load 200W (DC-4000)

Model: PVL105.02000040

Product Features:

- Wide frequency range
- Low VSWR
- Low PIM
- High reliability

Technical Specifications:

Electrical	
Frequency (MHz)	DC-4000
Return loss/VSWR	⩽-20dB/1.22
PIM, 3rd Order (dBc)	⩽ -160 (2 x 43 dBm carrier)
Average power, maximum (W)	200
Impedance (Ω)	50

Mechanical	
Operating temperature	-55°C to +65°C
Storage temperature	-40°C to +85°C
Relative humidity	5% - 95%
Classification of waterproof	IP67
Dimensions (H x W x D) (mm)	200x198x82mm
Net weight (with installation kit) (kg)	⩽2.0
Connector	N-Female/Din-Female/4.3-10 Female

Schematic Diagram

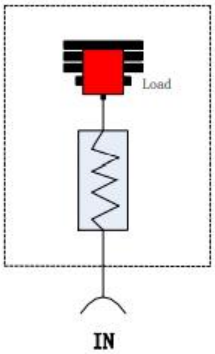

Outline Drawing:

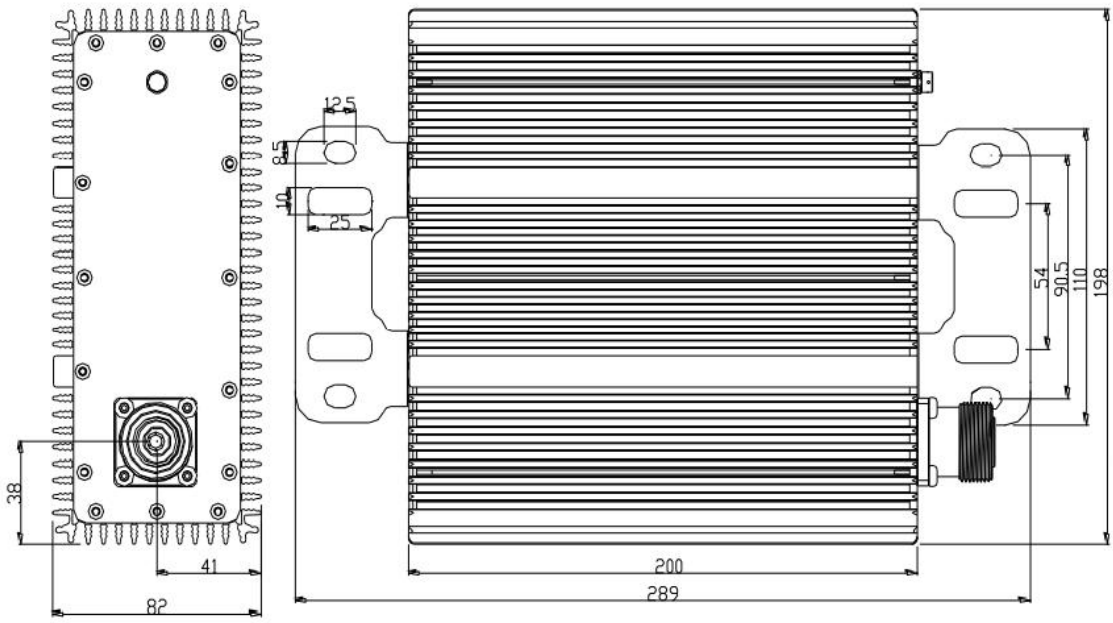

Termination Load 100W (DC-4000)

Model: PVL105.01000040

Product Features:

- Wide frequency range
- Low VSWR
- Low PIM
- High reliability

Technical Specifications:

Electrical	
Frequency (MHz)	DC-4000
Return loss/VSWR	≤-20dB/1.22
PIM, 3rd Order (dBc)	≤ -160 (2 x 43 dBm carrier)
Average power, maximum (W)	100
Impedance (Ω)	50

Mechanical	
Operating temperature	-55°C to +65°C
Storage temperature	-40°C to +85°C
Relative humidity	5% - 95%
Classification of waterproof	IP67
Dimensions (H x W x D) (mm)	189x100x60mm
Net weight (with installation kit) (kg)	≤2.0
Connector	N-Female/Din-Female/4.3-10 Female

Schematic Diagram

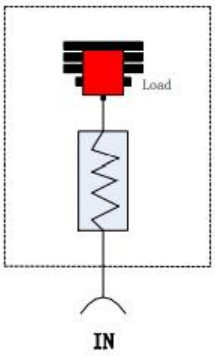

Outline Drawing:

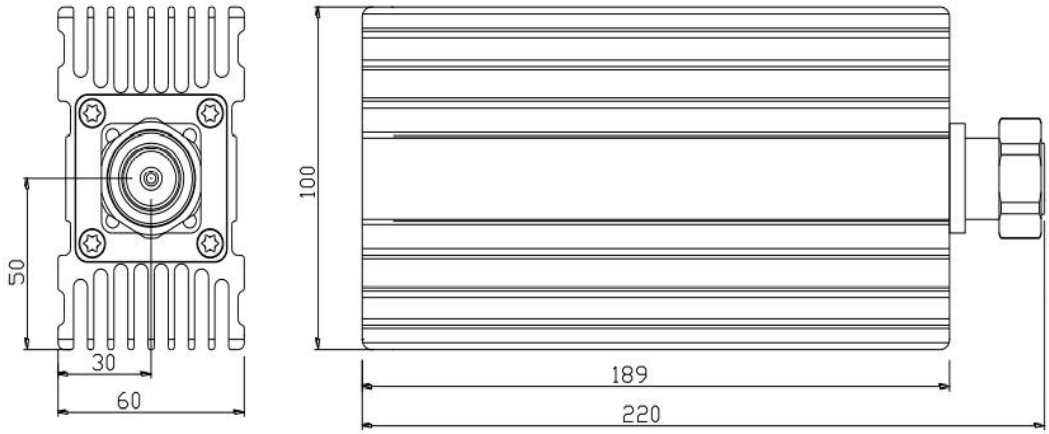

Built-in Load 3dB Hybrid Coupler (700-6000)

Model: PVL103.030760

Product Features:

- 5G compatible
- Low insert loss
- Low PIM
- High reliability

Technical Specifications:

Electrical	
Frequency (MHz)	700-6000
Insert loss (dB)	≤0.1
Attenuation (dB)	≤3.1±1.6
Isolation (dB)	20
VSWR	≤1.35
PIM, 3rd Order (dBc)	≤ -160 (2 x 43 dBm carrier)
Average power, maximum (W)	200
Impedance (Ω)	50
DC/AISG	P1-P3 Bypass; P2-Short cut

Mechanical	
Operating temperature	-20°C to +60°C
Storage temperature	-35°C to +75°C
Relative humidity	5% - 95%
Classification of waterproof	IP66
Dimensions (H x W x D) (mm)	216x197x97.5mm
Net weight (with installation kit) (kg)	≤4.5
Connector	N-Female/Din-Female/4.3-10 Female

Directional Coupler (698-3800)

Model: PVL103.400638

Product Features:

- Low insert loss
- Low PIM
- High reliability

Technical Specifications:

Electrical										
Coupling level	5	6	7	10	15	20	25	30	35	40
Attenuation (dB)	±0.8	±0.8	±0.8	±1.0	±1.0	±1.0	±1.2	±1.2	±1.2	±1.2
Attenuation (dB) IN→P1	2.0	1.8	1.3	0.7	0.4	0.3	0.2	0.2	0.2	0.2
Isolation (dB)	25	26	27	30	35	40	45	50	55	60
Frequency (MHz)	698-3800									
VSWR	≤1.25									
PIM, 3rd Order (dBc)	≤ -160 (2 x 43 dBm carrier)									
Average power, maximum (W)	500									
Impedance (Ω)	50									

Mechanical	
Operating temperature	-20°C to +60°C
Storage temperature	-35°C to +75°C
Relative humidity	5% - 95%
Classification of waterproof	IP67
Dimensions (H x W x D) (mm)	169x63.4x32mm
Net weight (with installation kit) (kg)	≤0.75
Connector	N-Female/Din-Female/4.3-10 Female

Schematic Diagram

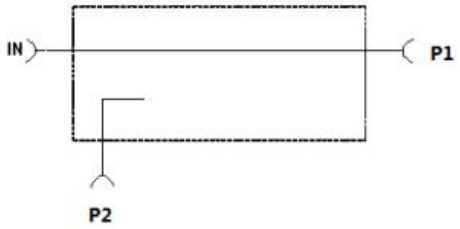

Outline Drawing:

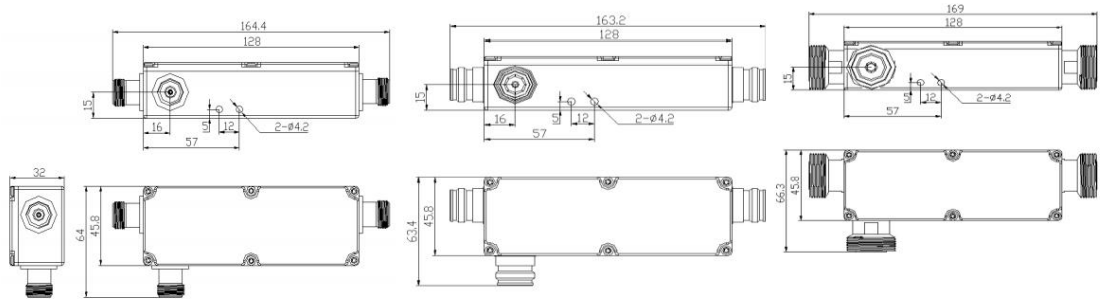

Directional Coupler (698-2700)

Model: PVL103.400627

Product Features:

- Low insert loss
- Low PIM
- High reliability

Technical Specifications:

Electrical										
Coupling level	5	6	7	10	15	20	25	30	35	40
Attenuation (dB)	±0.8	±0.8	±0.8	±1.0	±1.0	±1.0	±1.2	±1.2	±1.2	±1.2
Attenuation (dB) IN→P1	2.0	1.8	1.3	0.7	0.4	0.3	0.2	0.2	0.2	0.2
Isolation (dB)	25	26	27	30	35	40	45	50	55	60
Frequency (MHz)	698-2700									
VSWR	≤1.25									
PIM, 3rd Order (dBc)	≤ -160 (2 x 43 dBm carrier)									
Average power, maximum (W)	500									
Impedance (Ω)	50									

Mechanical	
Operating temperature	-20°C to +60°C
Storage temperature	-35°C to +75°C
Relative humidity	5% - 95%
Classification of waterproof	IP67
Dimensions (H x W x D) (mm)	169x63.4x32mm
Net weight (with installation kit) (kg)	≤0.75
Connector	N-Female/Din-Female/4.3-10 Female

Schematic Diagram

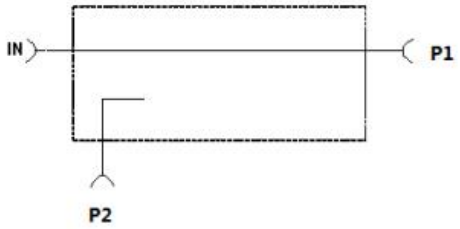

Outline Drawing:

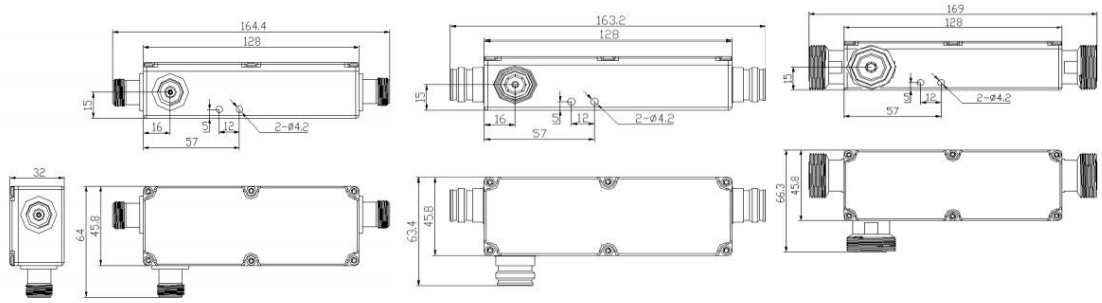

3dB Hybrid Coupler (698-6000)

Model: PVL104.02020660

Product Features:

- 5G compatible
- Excellent intermodulation performance
- High stability

Technical Specifications:

Electrical	
Frequency (MHz)	698-6000
Insertion Loss (dB)	≤3.1
Ripple in Band (dB)	≤1.6
Isolation (dB)	≥20
Return Loss/VSWR	≤-20dB/1.22
PIM, 3rd Order (dBc)	≤ -160 (2 x 43 dBm carrier)
Average power, maximum (W)	200
Impedance (Ω)	50
DC/AISG	By-pass(max.3000mA)
Lightning protection	10KA; 10/350μs pulse

Mechanical	
Operating temperature	-20°C to +65°C
Storage temperature	-40°C to +85°C
Relative humidity	5% - 95%
Classification of waterproof	IP67
Dimensions (H x W x D) (mm)	184x42x44mm
Net weight (with installation kit) (kg)	≤0.8
Connector	N-female/Din-Female/4.3-10 Female

Schematic Diagram

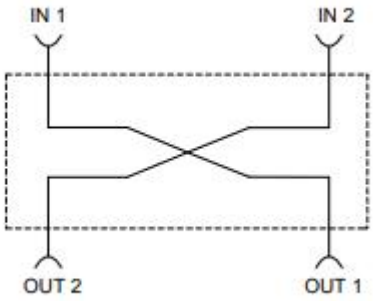

Outline Drawing:

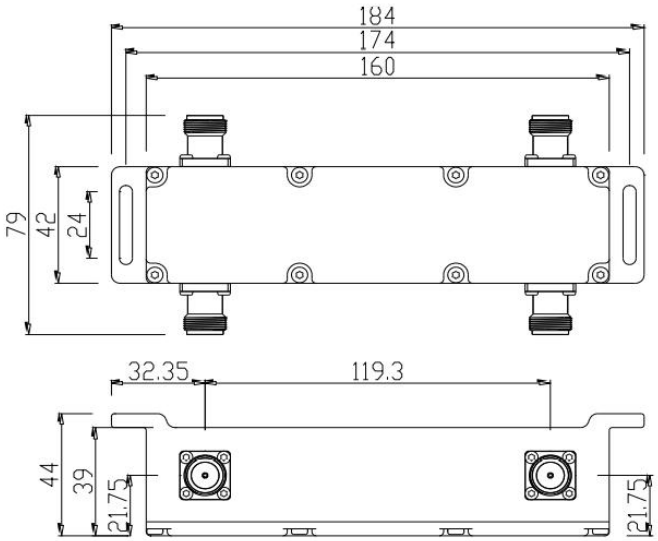

3dB Hybrid Coupler (550-2700)

Model: PVL104.02020527

Product Features:

- Low insertion loss
- Excellent intermodulation performance
- High stability
- High isolation

Technical Specifications:

Electrical	
Frequency (MHz)	550-2700
Insertion loss (dB)	≤3.8
Ripple in Band (dB)	≤1.0
Isolation (dB)	≥25
Return Loss/VSWR	≤-20dB/1.22
PIM, 3rd Order (dBc)	≤ -160 (2 x 43 dBm carrier)
Average power, maximum (W)	500
Impedance (Ω)	50
DC/AISG	By-pass(max.3000mA)
Lightning protection	10KA; 10/350μs pulse

Mechanical	
Operating temperature	-20°C to +65°C
Storage temperature	-40°C to +85°C
Relative humidity	5% - 95%
Classification of waterproof	IP67
Dimensions (H x W x D) (mm)	200x42x39.5mm
Net weight (with installation kit) (kg)	≤1.25
Connector	N-female/Din-Female/4.3-10 Female

Schematic Diagram

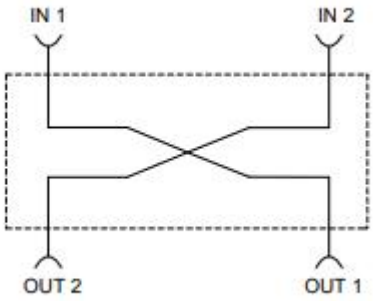

Outline Drawing:

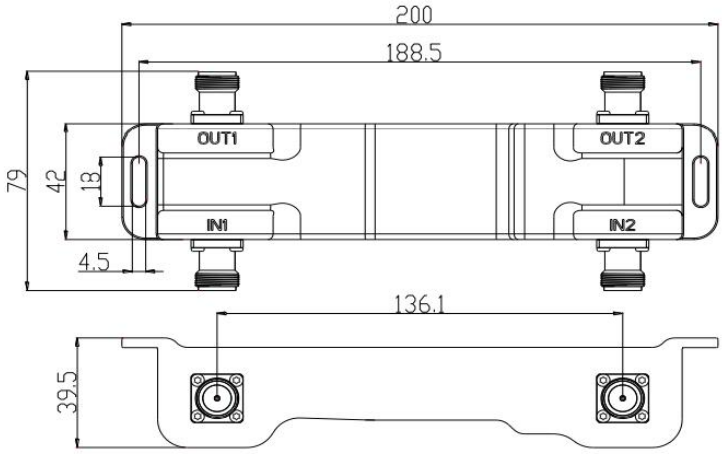

3dB Hybrid Coupler (698-2700)

Model: PVL104.02020627

Product Features:

- Low insertion loss
- Excellent intermodulation performance
- High stability
- High isolation

Technical Specifications:

Electrical	
Frequency (MHz)	698-2700
Attenuation in-out (dB)	⩽3.5
Isolation (dB)	⩾28
Return Loss/VSWR	⩽-20dB/1.22
PIM, 3rd Order (dBc)	⩽ -160 (2 x 43 dBm carrier)
Average power, maximum (W)	300
Impedance (Ω)	50
DC/AISG	By-pass(max.3000mA)
Lightning protection	10KA; 10/350μs pulse

Mechanical	
Operating temperature	-20°C to +65°C
Storage temperature	-40°C to +85°C
Relative humidity	5% - 95%
Classification of waterproof	IP67
Dimensions (H x W x D) (mm)	184x42x44mm
Net weight (with installation kit) (kg)	⩽0.8
Connector	N-female/Din-Female/4.3-10 Female

Schematic Diagram

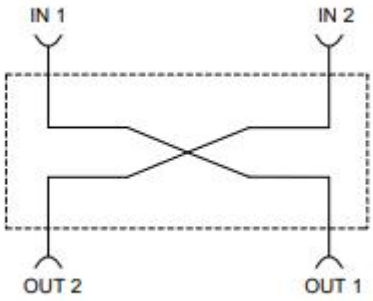

Outline Drawing:

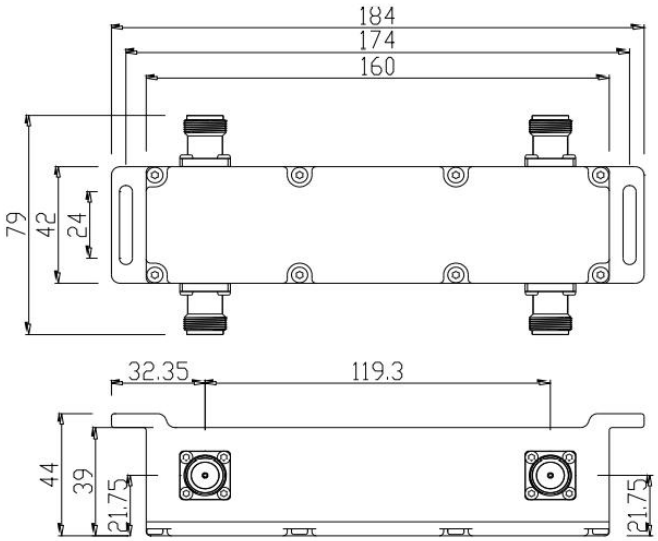

3x3 Matrix Hybrid Coupler (698-6000)

Model: PVL104.03030660

Product Features:

- Low insertion loss
- Ultra-low intermodulation
- High stability
- High isolation

Technical Specifications:

Electrical	
Frequency (MHz)	698-6000
Coupling & Variation (Contain insertion loss)	5.0±2.dB
Isolation (dB)	⩾18
Return Loss/VSWR	⩽-20dB/1.5
PIM, 3rd Order (dBc)	⩽ -160 (2 x 43 dBm carrier)
Average power, maximum (W)	500
Impedance (Ω)	50
DC/AISG	DC path IN 1→OUT 3, IN 2→OUT 2 DC path IN 3→OUT 1 (max. 6.5 A AISG2.0 conform)

Mechanical	
Operating temperature	-20°C to +60°C
Storage temperature	-40°C to +85°C
Relative humidity	5% - 95%
Classification of waterproof	IP67
Dimensions (H x W x D) (mm)	194x100x55.2mm
Net weight (with installation kit) (kg)	⩽1.8
Connector	N-female/Din-Female/4.3-10 Female

Schematic Diagram

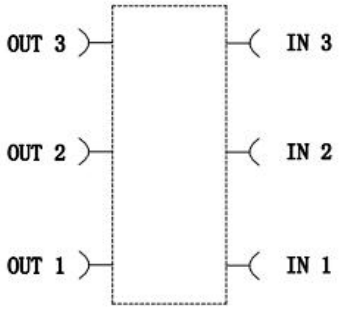

Outline Drawing:

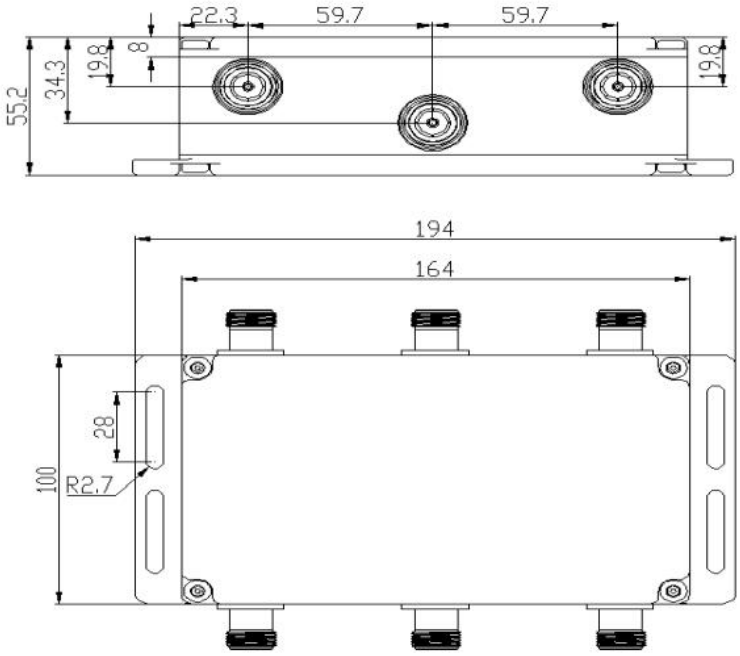

3x3 Matrix Hybrid Coupler (698-2700)

Model: PVL104.03030627

Product Features:

- Low insertion loss
- Ultra-low intermodulation
- High stability
- High isolation

Technical Specifications:

Electrical	
Frequency (MHz)	698-2700
Coupling & Variation (Contain insertion loss)	5.0±1.2dB 698-2700
Isolation (dB)	⩾25
Return Loss/VSWR	⩽-20dB/1.25
PIM, 3rd Order (dBc)	⩽ -155 (2 x 43 dBm carrier)
Average power, maximum (W)	500
Impedance (Ω)	50
DC/AISG	DC path IN 1→OUT 3, IN 2→OUT 2 DC path IN 3→OUT 1 (max. 6.5 A AISG2.0 conform)

Mechanical	
Operating temperature	-20°C to +60°C
Storage temperature	-40°C to +85°C
Relative humidity	5% - 95%
Classification of waterproof	IP67
Dimensions (H x W x D) (mm)	194x100x55.2mm
Net weight (with installation kit) (kg)	⩽1.8
Connector	N-female/Din-Female/4.3-10 Female

Schematic Diagram

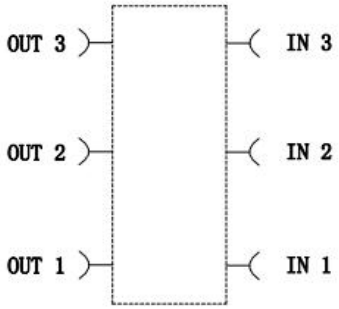

Outline Drawing:

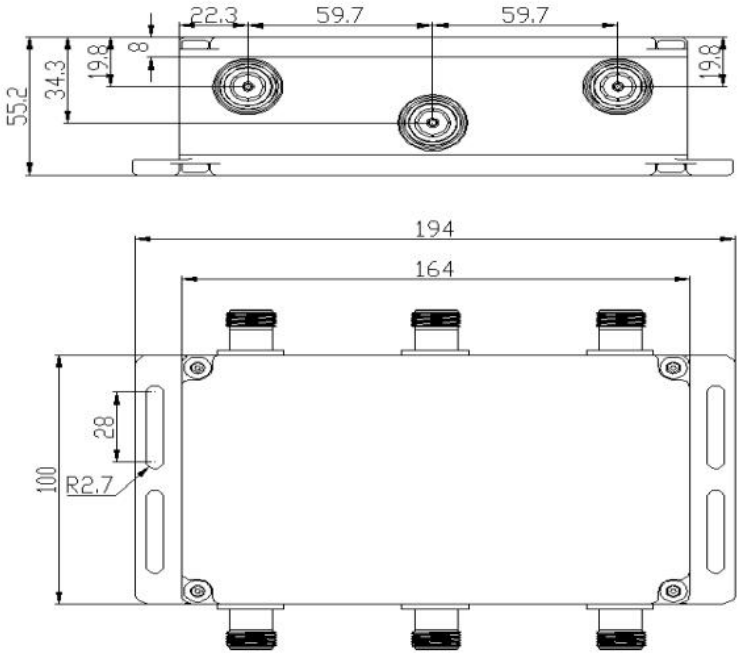

4x4 Matrix Hybrid Coupler (698-6000)

Model: PVL104.04040660

Product Features:

- 698-6000MHz
- Low insertion loss
- Ultra-low intermodulation
- High stability
- High isolation

Technical Specifications:

Electrical	
Frequency (MHz)	698-6000
Attenuation in-out (dB)	≤6.9
Isolation (dB)	≥18
Return Loss/VSWR	≤-20dB/1.5
PIM, 3rd Order (dBc)	≤ -160 (2 x 43 dBm carrier)
Average power, maximum (W)	200
Impedance (Ω)	50
DC/AISG	DC path IN 1→OUT 4, IN 2→OUT 2 DC path IN 3→OUT 3, IN 4→OUT 1 (max. 6.5 A AISG2.0 conform)
Lightning protection	N/A

Mechanical	
Operating temperature	-20°C to +65°C
Storage temperature	-40°C to +85°C
Relative humidity	5% - 95%
Classification of waterproof	IP67
Dimensions (H x W x D) (mm)	250x94x45mm
Net weight (with installation kit) (kg)	≤2.0
Connector	N-female/Din-Female/4.3-10 Female

Schematic Diagram

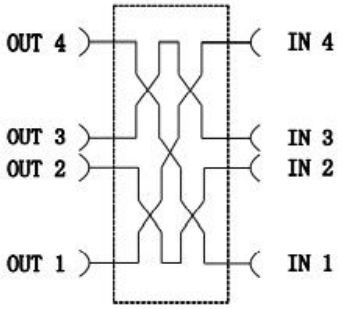

Outline Drawing:

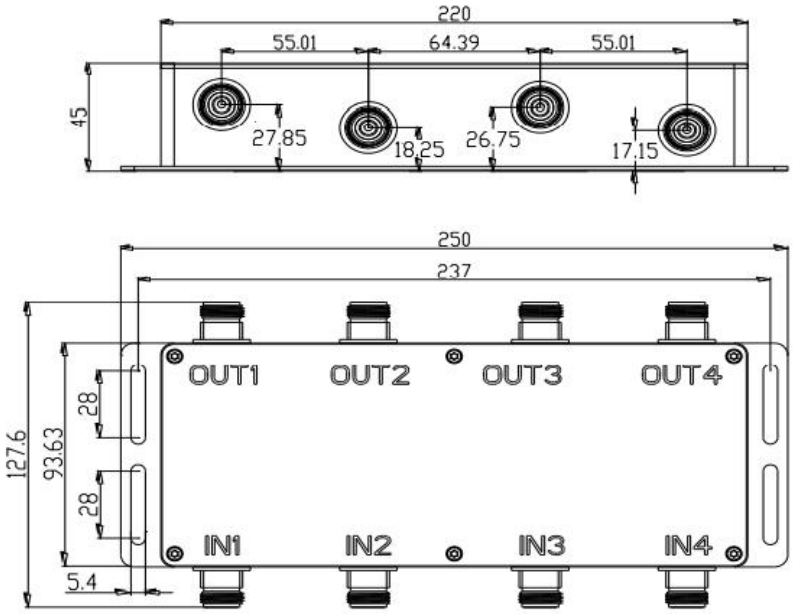

4x4 Matrix Hybrid Coupler (698-2700)

Model: PVL104.04040627

Product Features:

- 698-2700MHz
- Low insertion loss
- Ultra-low intermodulation
- High stability
- High isolation

Technical Specifications:

Electrical	
Frequency (MHz)	698-2700
Attenuation in-out (dB)	≤6.9
Isolation (dB)	≥26
Return Loss/VSWR	≤-20dB/1.22
PIM, 3rd Order (dBc)	≤ -160 (2 x 43 dBm carrier)
Average power, maximum (W)	300
Impedance (Ω)	50
DC/AISG	DC path IN 1→OUT 4, IN 2→OUT 2 DC path IN 3→OUT 3, IN 4→OUT 1 (max. 6.5 A AISG2.0 conform)
Lightning protection	N/A

Mechanical	
Operating temperature	-20°C to +65°C
Storage temperature	-40°C to +85°C
Relative humidity	5% - 95%
Classification of waterproof	IP67
Dimensions (H x W x D) (mm)	250x94x45mm
Net weight (with installation kit) (kg)	≤2.0
Connector	N-female/Din-Female/4.3-10 Female

Schematic Diagram

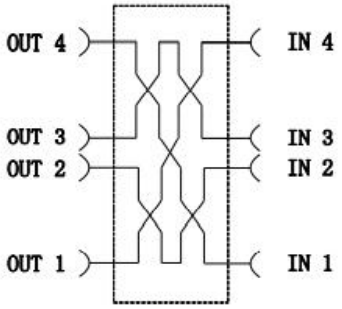

Outline Drawing:

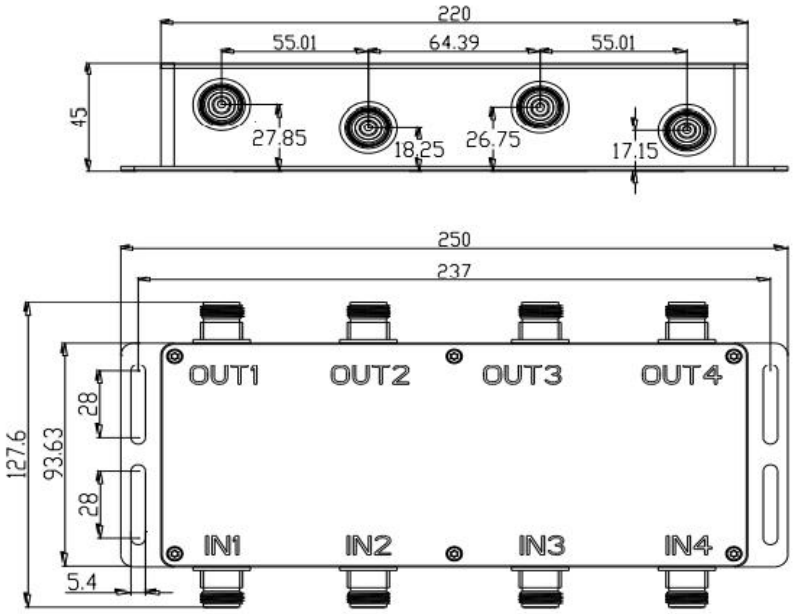

Indoor Diplexer Combiner (380-2500)

Model: PVL101.02010325

Product Features:

- Low Intermodulation
- High Isolation, Low VSWR and Loss
- Low Weight
- High Reliability

Technical Specifications:

Electrical		
Frequency (MHz)	380-960	1710-2500
Insertion Loss (dB)	≤0.3	
Ripple (dB)	≥0.2	
Isolation (dB)	≥80	
Return Loss/VSWR	≤18dB/1.22	
PIM, 3rd Order (dBc)	≤ -140 (2 x 43 dBm carrier)	
Average power, maximum (W)	200	
Impedance (Ω)	50	

Mechanical	
Operating temperature	-20°C to +65°C
Storage temperature	-40°C to +85°C
Relative humidity	5% - 95%
Classification of waterproof	Indoor
Dimensions (H x W x D) (mm)	148x73x29.5mm
Net weight (with installation kit) (kg)	≤0.52
Connector	N-Female

Schematic Diagram

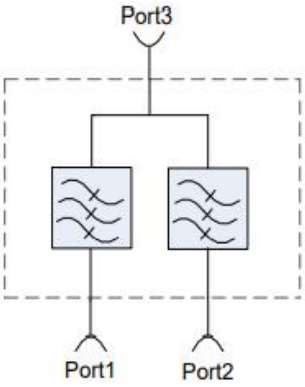

Outline Drawing:

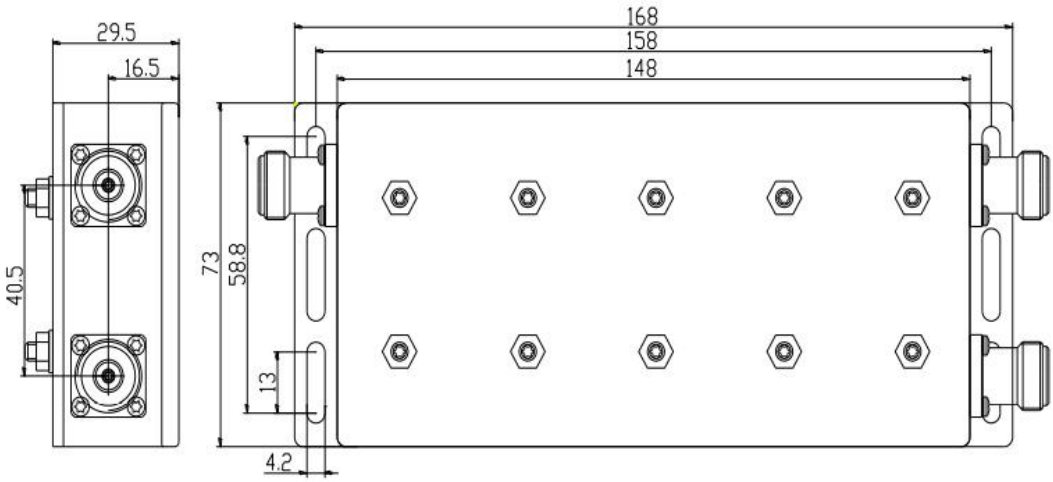

Indoor Diplexer Combiner (380-2700)

Model: PVL101.02010327

Product Features:

- Low Intermodulation
- High Isolation, Low VSWR and Loss
- Low Weight
- High Reliability

Technical Specifications:

Electrical		
Frequency (MHz)	380-2200	2400-2700
Insertion Loss (dB)	≤0.4	≤0.5
Ripple (dB)	≥0.4	
Isolation (dB)	≥80	
Return Loss/VSWR	≤19dB/1.22	
PIM, 3rd Order (dBc)	≤ -140 (2 x 43 dBm carrier)	
Average power, maximum (W)	200	
Impedance (Ω)	50	

Mechanical	
Operating temperature	-20°C to +65°C
Storage temperature	-40°C to +85°C
Relative humidity	5% - 95%
Classification of waterproof	Indoor
Dimensions (H x W x D) (mm)	119x104x28mm
Net weight (with installation kit) (kg)	≤0.6
Connector	N-Female

Schematic Diagram

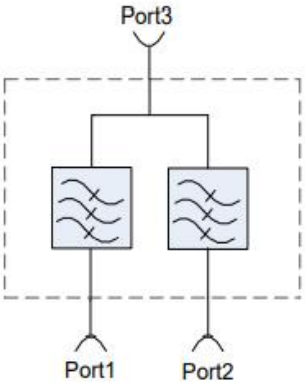

Outline Drawing:

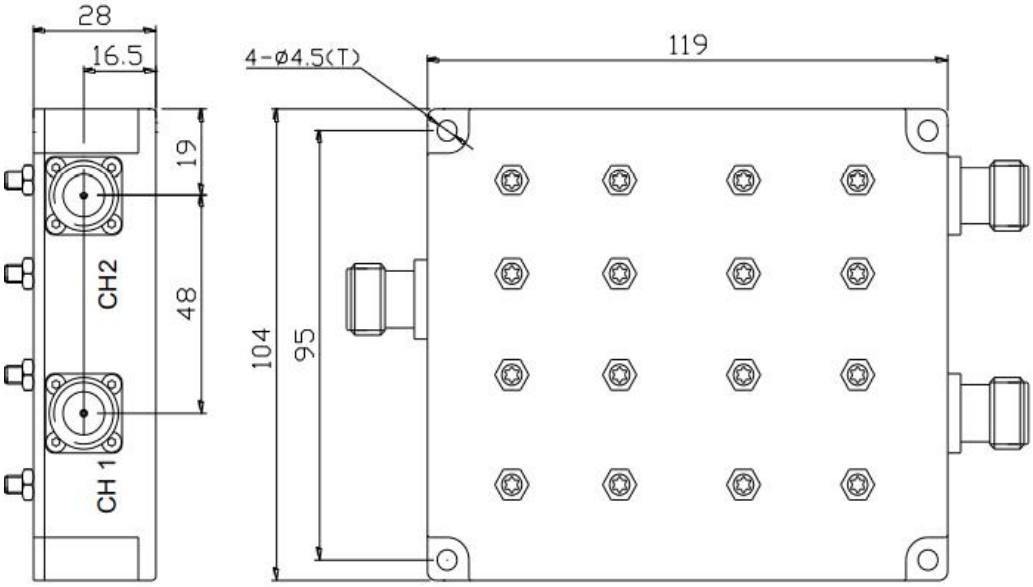

Indoor Diplexer Combiner (1710-2170)

Model: PVL101.02011721

Product Features:

- Low Intermodulation
- High Isolation, Low VSWR and Loss
- Low Weight
- High Reliability

Technical Specifications:

Electrical		
Frequency (MHz)	1710-1880	1920-2170
Insertion Loss (dB)	≤0.6	
Ripple (dB)	≥0.5	
Isolation (dB)	≥80	
Return Loss/VSWR	≤18dB/1.22	
PIM, 3rd Order (dBc)	≤ -145 (2 x 43 dBm carrier)	
Average power, maximum (W)	200	
Impedance (Ω)	50	

Mechanical	
Operating temperature	-20°C to +65°C
Storage temperature	-40°C to +85°C
Relative humidity	5% - 95%
Classification of waterproof	Indoor
Dimensions (H x W x D) (mm)	120x98x35.5mm
Net weight (with installation kit) (kg)	≤0.6
Connector	N-Female

Schematic Diagram

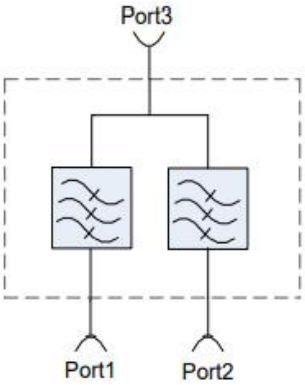

Outline Drawing:

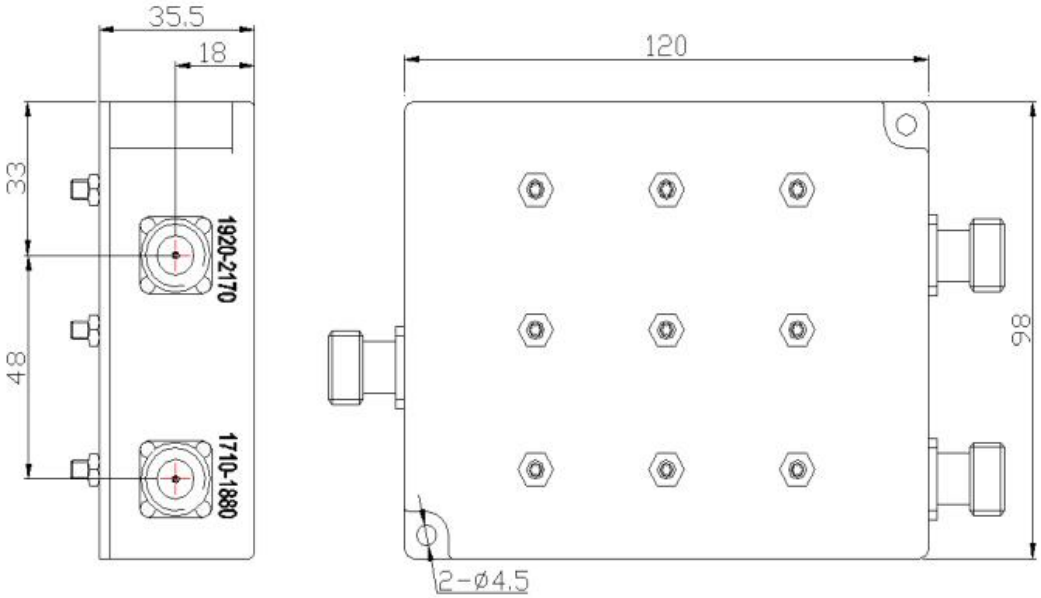

Indoor Triplexer Combiner (698-2700)

Model: PVL101.03010627

Product Features:

- Low Intermodulation
- High Isolation, Low VSWR and Loss
- Low Weight
- High Reliability

Technical Specifications:

Electrical			
Frequency (MHz)	698-960	1710-2170	2400-2700
Insertion Loss (dB)	≤0.5		
Ripple (dB)	≥0.3		
Isolation (dB)	≥80		
Return Loss/VSWR	≤19dB/1.22		
PIM, 3rd Order (dBc)	≤ -140 (2 x 43 dBm carrier)		
Average power, maximum (W)	200		
Impedance (Ω)	50		

Mechanical	
Operating temperature	-20°C to +65°C
Storage temperature	-40°C to +85°C
Relative humidity	5% - 95%
Classification of waterproof	Indoor
Dimensions (H x W x D) (mm)	148x120x35.5mm
Net weight (with installation kit) (kg)	≤0.9
Connector	N-Female

Schematic Diagram

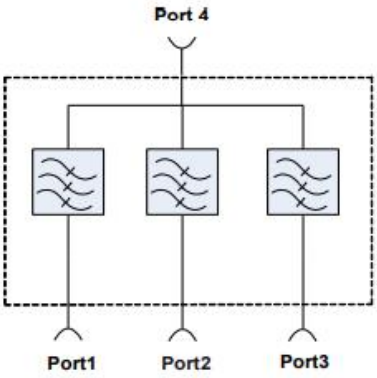

Outline Drawing:

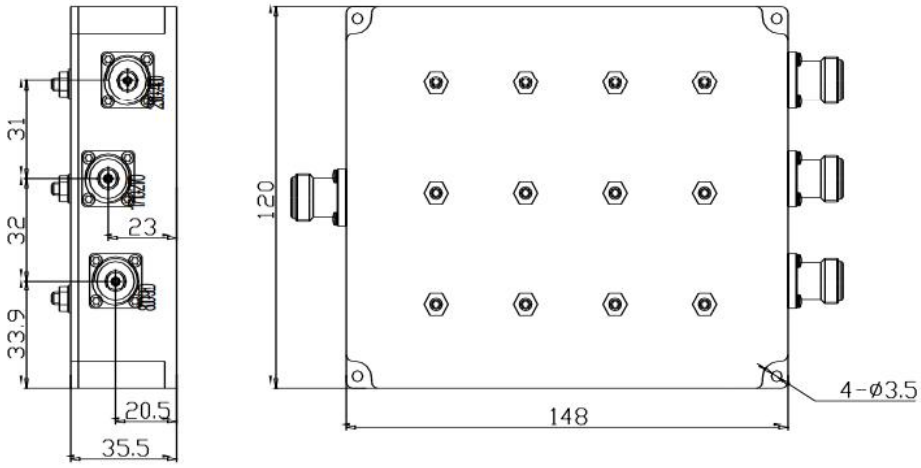

Indoor Triplexer Combiner (800-2170)

Model: PVL101.03010821

Product Features:

- Low Intermodulation
- High Isolation, Low VSWR and Loss
- Low Weight
- High Reliability

Technical Specifications:

Electrical			
Frequency (MHz)	800-960	1710-1880	1920-2170
Insertion Loss (dB)	≤0.6		
Ripple (dB)	≥0.4		
Isolation (dB)	≥80		
Return Loss/VSWR	≤20dB/1.22		
PIM, 3rd Order (dBc)	≤ -140 (2 x 43 dBm carrier)		
Average power, maximum (W)	200		
Impedance (Ω)	50		

Mechanical	
Operating temperature	-20°C to +65°C
Storage temperature	-40°C to +85°C
Relative humidity	5% - 95%
Classification of waterproof	Indoor
Dimensions (H x W x D) (mm)	119x104x28mm
Net weight (with installation kit) (kg)	≤1.3
Connector	N-Female

Schematic Diagram

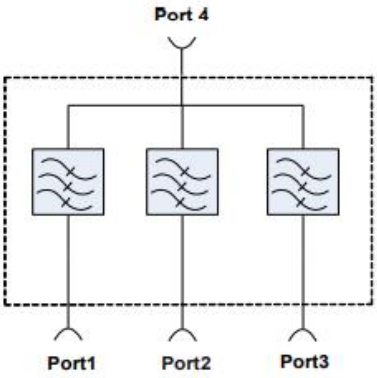

Outline Drawing:

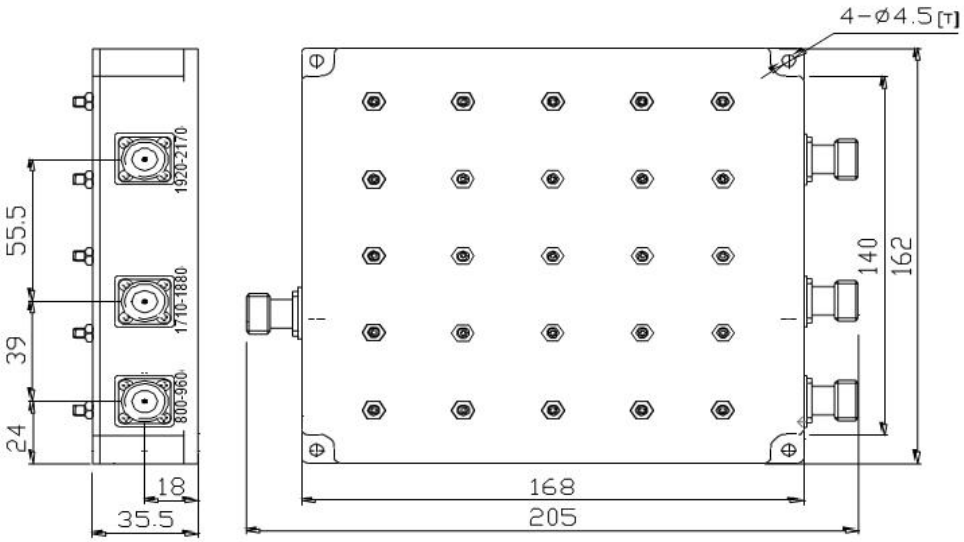

Indoor Quadplexer Combiner (698-2400)

Model: PVL101.04010624

Product Features:

- Low Intermodulation
- High Isolation, Low VSWR and Loss
- Low Weight
- High Reliability

Technical Specifications:

Electrical				
Frequency (MHz)	698-960	1710-1880	1920-2170	2300-2400
Insertion Loss (dB)	⩽0.8			
Ripple (dB)	⩾0.5			
Isolation (dB)	⩾80			
Return Loss/VSWR	⩽20dB/1.22			
PIM, 3rd Order (dBc)	⩽ -150 (2 x 43 dBm carrier)			
Average power, maximum (W)	200			
Impedance (Ω)	50			

Mechanical	
Operating temperature	-20°C to +65°C
Storage temperature	-40°C to +85°C
Relative humidity	5% - 95%
Classification of waterproof	Indoor
Dimensions (H x W x D) (mm)	175x148x35.5mm
Net weight (with installation kit) (kg)	⩽1.45
Connector	N-Female

Schematic Diagram

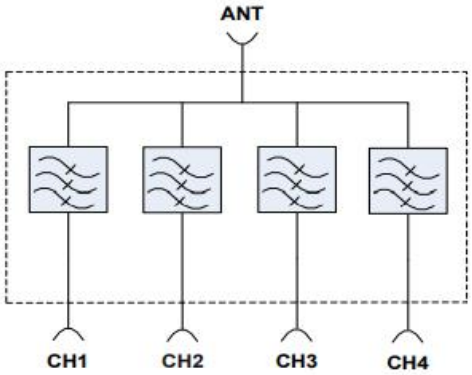

Outline Drawing:

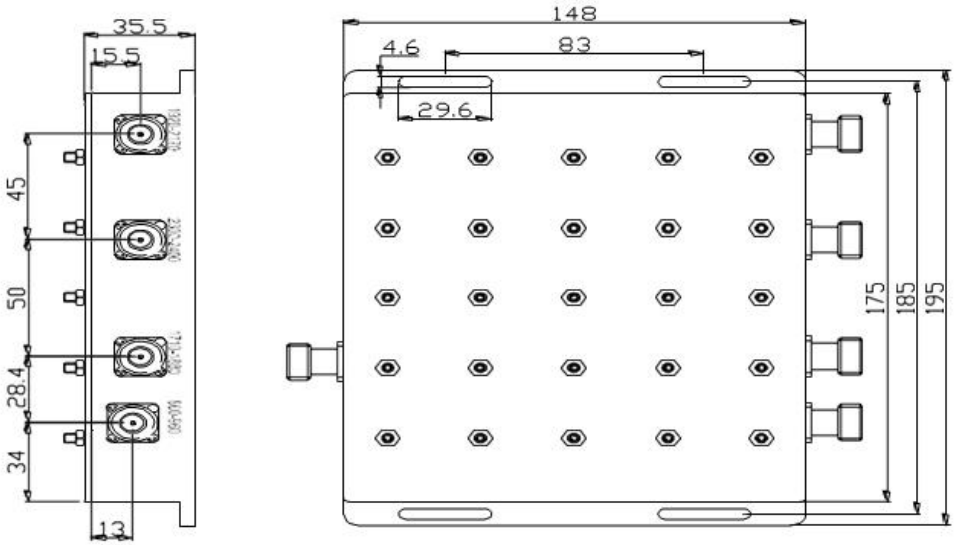

17in 4out POI (Point of Interface) (703-2690)

Model: PVL107.17040726

Product Features:

- Low PIM
- High isolation
- Low VSWR and loss
- High reliability

Technical Specifications:

Electrical	
3 Ports LTE700	703-748MHz/758-803MHz
3 Ports LTE900	885-915MHz/930-960MHz
3 Ports LTE1800	1710-1785MHz/1805-1880MHz
4 Port WCDMA2100	1920-1980MHz/2110-2170MHz
1 Port LTE2600 FDD	2500-2520MHz/2620-2640MHz
1 Port LTE2600 FDD	2520-2540MHz/2640-2660MHz 2560-2570MHz/2680-2690MHz
1 Port LTE2600 FDD	2540-2560MHz/2660-2680MHz
1 Port LTE2600 TDD	2575-2615MHz
Insert loss (dB)	⩽8.5 dB for LTE703MHz～WCDMA 2170MHz ⩽10.5 dB for LTE2600MHz
Isolation (dB)	Same band ⩾25 dB, Different bands⩾80dB, FDD/TDD⩾110dB
Return Loss	⩽18dB
PIM, 3rd Order (dBc)	⩽ -150 (2 x 43 dBm carrier)
Monitoring port	-40～-30dBc
Average power, maximum (W)	150
Impedance (Ω)	50
Lightning protection	10KA; 10/350μs pulse

Mechanical	
Operating temperature	+10°C to +55°C
Storage temperature	0°C to +65°C
Relative humidity	5% - 95%
Classification of waterproof	Indoor, 19” rackable
Dimensions (H x W x D) (mm)	482.6x324x352mm
Net weight (without connectors) (kg)	⩽40
Connector	Din-Female

Outline Drawing:

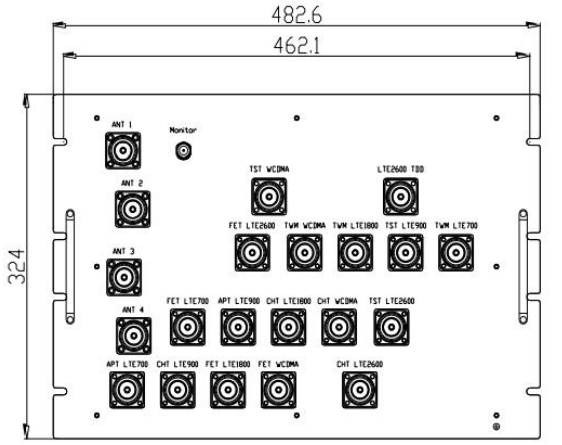

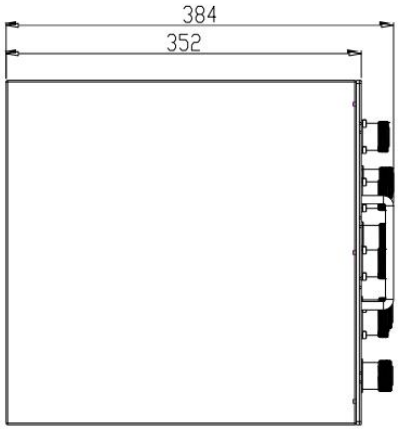

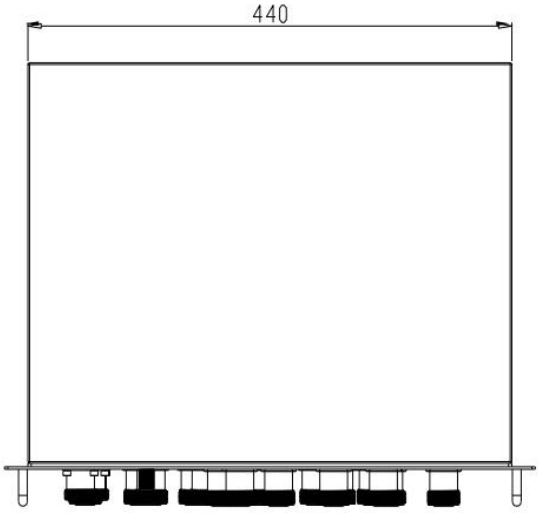

Power Splitter 2-way (555-3800)

Model: PVL102.01020538

Product Features:

- Low insert loss
- Low PIM
- High reliability

Technical Specifications:

Electrical	
Frequency (MHz)	555-3800
VSWR	≤1.25
Split loss (dB)	≤3.2
Insert loss (dB)	≤0.1
Ripple in band (dB)	≤0.3
PIM, 3rd Order (dBc)	≤ -160 (2 x 43 dBm carrier)
Average power, maximum (W)	300
Impedance (Ω)	50

Mechanical	
Operating temperature	-30°C to +75°C
Storage temperature	-45°C to +85°C
Relative humidity	5% - 95%
Classification of waterproof	IP67
Dimensions (H x W x D) (mm)	211x26x26mm
Net weight (with installation kit) (kg)	≤1.5
Connector	N-Female/Din-Female/4.3-10 Female

Schematic Diagram

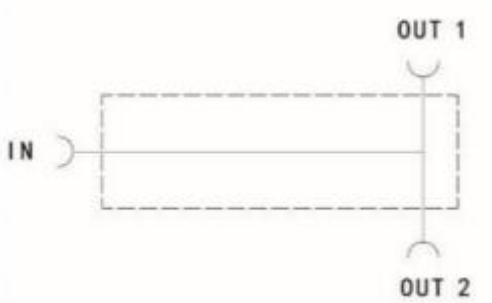

Outline Drawing:

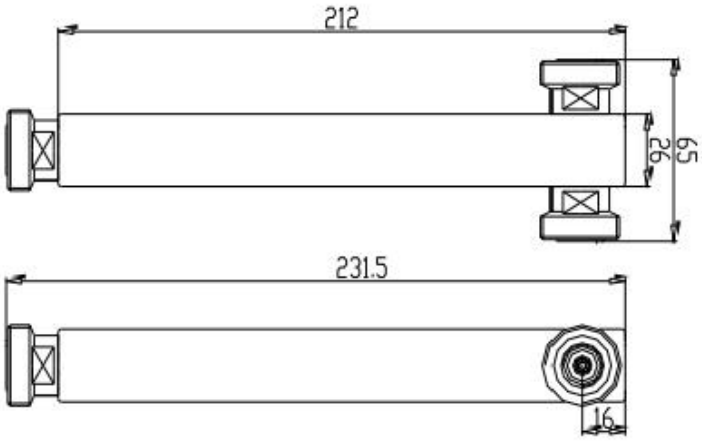

Power Splitter 2-way (698-2700)

Model: PVL102.01020627

Product Features:

- Low insert loss
- Low PIM
- High reliability

Technical Specifications:

Electrical	
Frequency (MHz)	698-2700
VSWR	≤1.25
Split loss (dB)	≤3.2
Insert loss (dB)	≤0.05
Ripple in band (dB)	≤0.3
PIM, 3rd Order (dBc)	≤ -160 (2 x 43 dBm carrier)
Average power, maximum (W)	500
Impedance (Ω)	50

Mechanical	
Operating temperature	-30°C to +75°C
Storage temperature	-45°C to +85°C
Relative humidity	5% - 95%
Classification of waterproof	IP67
Dimensions (H x W x D) (mm)	204.7x33x33mm
Net weight (with installation kit) (kg)	≤1.5
Connector	N-Female/Din-Female/4.3-10 Female

Schematic Diagram

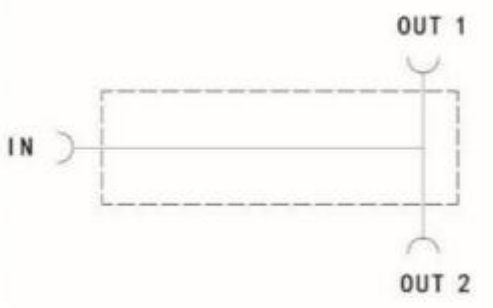

Outline Drawing:

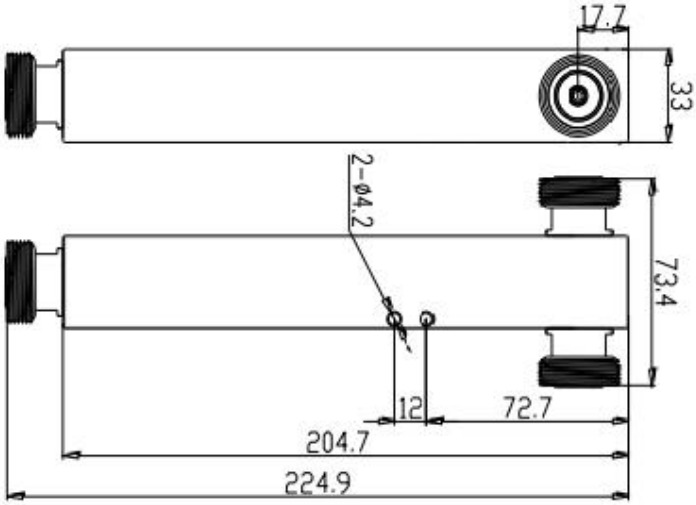

Power Splitter 3-way (555-3800)

Model: PVL102.01030538

Product Features:

- Low insert loss
- Low PIM
- High reliability

Technical Specifications:

Electrical	
Frequency (MHz)	555-3800
VSWR	≤1.25
Split loss (dB)	≤5.2
Insert loss (dB)	≤0.1
Ripple in band (dB)	≤0.4
PIM, 3rd Order (dBc)	≤ -160 (2 x 43 dBm carrier)
Average power, maximum (W)	300
Impedance (Ω)	50

Mechanical	
Operating temperature	-30°C to +75°C
Storage temperature	-40°C to +85°C
Relative humidity	5% - 95%
Classification of waterproof	IP67
Dimensions (H x W x D) (mm)	217x26x26mm
Net weight (with installation kit) (kg)	≤0.55
Connector	N-Female/Din-Female/4.3-10 Female

Schematic Diagram

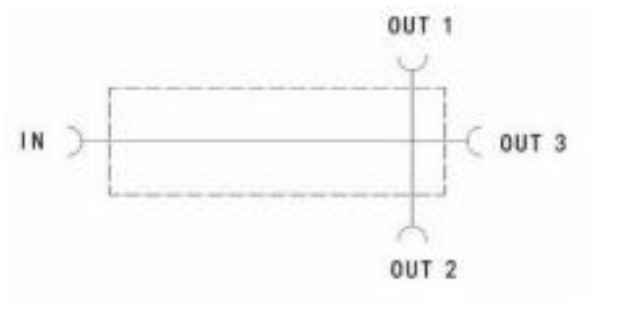

Outline Drawing:

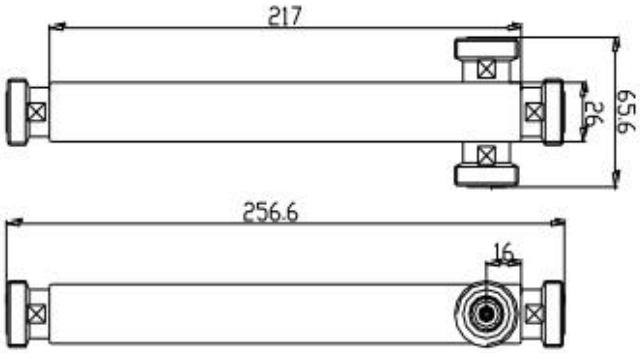

Power Splitter 3-way (698-2700)

Model: PVL102.01030627

Product Features:

- Low insert loss
- Low PIM
- High reliability

Technical Specifications:

Electrical	
Frequency (MHz)	698-2700
VSWR	≤1.25
Split loss (dB)	≤5.2
Insert loss (dB)	≤0.05
Ripple in band (dB)	≤0.4
PIM, 3rd Order (dBc)	≤ -160 (2 x 43 dBm carrier)
Average power, maximum (W)	500
Impedance (Ω)	50

Mechanical	
Operating temperature	-30°C to +75°C
Storage temperature	-40°C to +85°C
Relative humidity	5% - 95%
Classification of waterproof	IP67
Dimensions (H x W x D) (mm)	206.5x33x33mm
Net weight (with installation kit) (kg)	≤1.8
Connector	N-Female/Din-Female/4.3-10 Female

Schematic Diagram

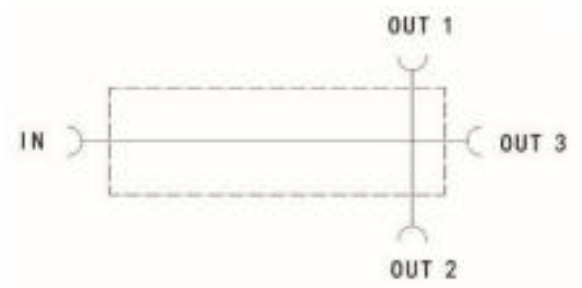

Outline Drawing:

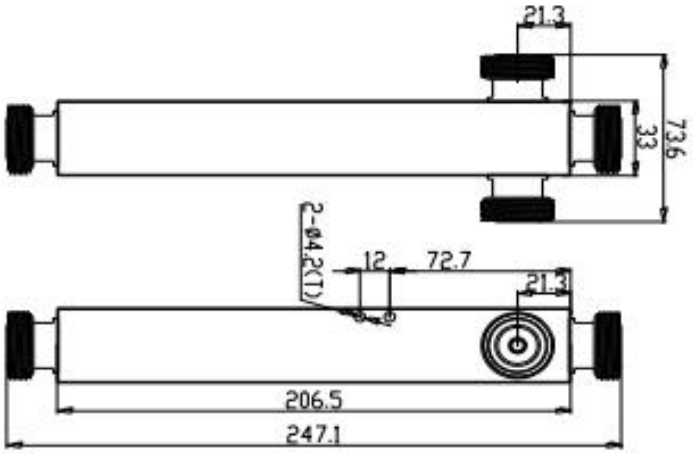

Power Splitter 4-way (555-3800)

Model: PVL102.01040538

Product Features:

- Low insert loss
- Low PIM
- High reliability

Technical Specifications:

Electrical	
Frequency (MHz)	555-3800
VSWR	≤1.25
Split loss (dB)	≤6.4
Insert loss (dB)	≤0.1
Ripple in band (dB)	≤0.5
PIM, 3rd Order (dBc)	≤ -160 (2 x 43 dBm carrier)
Average power, maximum (W)	300
Impedance (Ω)	50

Mechanical	
Operating temperature	-30°C to +75°C
Storage temperature	-40°C to +85°C
Relative humidity	5% - 95%
Classification of waterproof	IP67
Dimensions (H x W x D) (mm)	217x26x26mm
Net weight (with installation kit) (kg)	≤0.65
Connector	N-Female/Din-Female/4.3-10 Female

Schematic Diagram

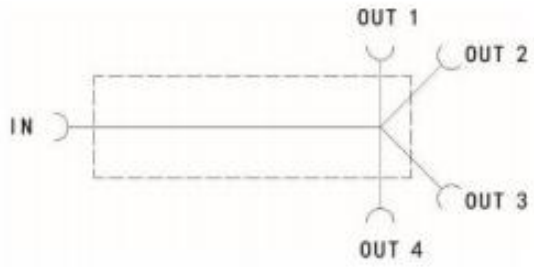

Outline Drawing:

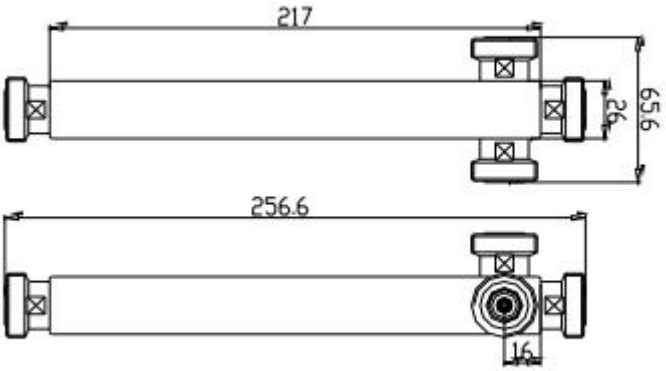

Power Splitter 4-way (698-2700)

Model: PVL102.01040627

Product Features:

- Low insert loss
- Low PIM
- High reliability

Technical Specifications:

Electrical	
Frequency (MHz)	698-2700
VSWR	≤1.25
Split loss (dB)	≤6.4
Insert loss (dB)	≤0.05
Ripple in band (dB)	≤0.5
PIM, 3rd Order (dBc)	≤ -160 (2 x 43 dBm carrier)
Average power, maximum (W)	500
Impedance (Ω)	50

Mechanical	
Operating temperature	-30°C to +75°C
Storage temperature	-40°C to +85°C
Relative humidity	5% - 95%
Classification of waterproof	IP67
Dimensions (H x W x D) (mm)	235.5x33x33mm
Net weight (with installation kit) (kg)	≤2.1
Connector	N-Female/Din-Female/4.3-10 Female

Schematic Diagram

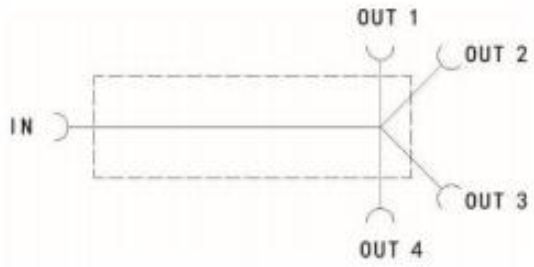

Outline Drawing:

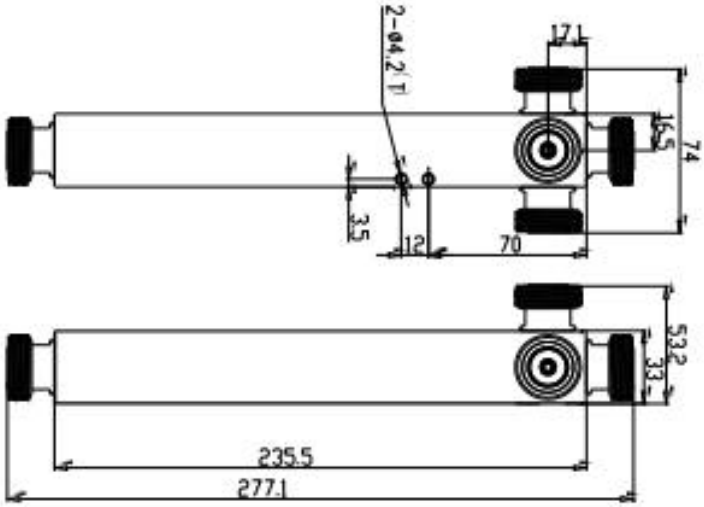

Power Splitter 8-way (698-2700)

Model: PVL102.01080627

Product Features:

- Low insert loss
- Low PIM
- High reliability

Technical Specifications:

Electrical	
Frequency (MHz)	698-2700
VSWR	≤1.25
Split loss (dB)	≤9.0
Insert loss (dB)	≤1.2
Ripple in band (dB)	≤0.5
PIM, 3rd Order (dBc)	≤ -160 (2 x 43 dBm carrier)
Average power, maximum (W)	50
Impedance (Ω)	50

Mechanical	
Operating temperature	-30°C to +75°C
Storage temperature	-40°C to +85°C
Relative humidity	5% - 95%
Classification of waterproof	IP65
Dimensions (H x W x D) (mm)	235.5x33x33mm
Net weight (with installation kit) (kg)	≤2.1
Connector	N-Female/Din-Female/4.3-10 Female

Power Tapper (698-6000)

Model: PVL108.300660

Product Features:

- 5G compatible
- Low insert loss
- Low PIM
- High reliability

Technical Specifications:

Electrical							
Frequency (MHz)	698-960/1700-2700/2700-6000						
Coupling level	3	6	10	13	15	20	30
Coupling value (dB)	4.8±0.8	7.0±0.8	10.4±1.0	13.2±1.25	15.1±1.25	20.1±1.5	30.1±2
Insert loss (dB)	≤3.1	≤2.0	≤1.2	≤1.0	≤0.8	≤0.5	≤0.4
VSWR	≤1.3@698-960MHz&1700-2700; ≤1.5@2700-6000MHz						
PIM, 3rd Order (dBc)	≤ -161 (2 x 43 dBm carrier)						
Average power, maximum (W)	200						
Impedance (Ω)	50						

Mechanical	
Operating temperature	-20°C to +60°C
Storage temperature	-35°C to +75°C
Relative humidity	5% - 95%
Classification of waterproof	IP67
Dimensions (H x W x D) (mm)	105x25x25mm
Net weight (kg)	≤0.50
Connector	N-Female/Din-Female/4.3-10 Female

Power Tapper (698-3800)

Model: PVL108.300638

Product Features:

- 5G compatible
- Low insert loss
- Low PIM
- High reliability

Technical Specifications:

Electrical							
Frequency (MHz)	698-3800						
Coupling level	3	6	10	13	15	20	30
Coupling value (dB)	4.8±0.8	7.0±0.8	10.4±1.0	13.2±1.25	15.1±1.25	20.1±1.5	30.1±2
Insert loss (dB)	≤3.1	≤2.0	≤1.2	≤1.0	≤0.8	≤0.5	≤0.4
VSWR	≤1.3						
PIM, 3rd Order (dBc)	≤ -160 (2 x 43 dBm carrier)						
Average power, maximum (W)	200						
Impedance (Ω)	50						

Mechanical	
Operating temperature	-20°C to +60°C
Storage temperature	-35°C to +75°C
Relative humidity	5% - 95%
Classification of waterproof	IP67
Dimensions (H x W x D) (mm)	105x25x25mm
Net weight (kg)	≤0.50
Connector	N-Female/Din-Female/4.3-10 Female

Power Tapper (400-2700)

Model: PVL108.300427

Product Features:

- Low insert loss
- Low PIM
- High reliability

Technical Specifications:

Electrical							
Frequency (MHz)	400-960/1710-2700						
Coupling level	3	6	10	13	15	20	30
Coupling value (dB)	4.8±0.8	7.0±0.8	10.4±1.0	13.2±1.25	15.1±1.25	20.1±1.5	30.1±1.3
Insert loss (dB)	≤3.1	≤2.0	≤1.2	≤1.0	≤0.8	≤0.5	≤0.4
VSWR	≤1.3						
PIM, 3rd Order (dBc)	≤ -163 (2 x 43 dBm carrier)						
Average power, maximum (W)	500						
Impedance (Ω)	50						

Mechanical	
Operating temperature	-20°C to +60°C
Storage temperature	-35°C to +75°C
Relative humidity	5% - 95%
Classification of waterproof	IP66
Dimensions (H x W x D) (mm)	138x46x25mm
Net weight (kg)	≤0.50
Connector	N-Female/Din-Female/4.3-10 Female